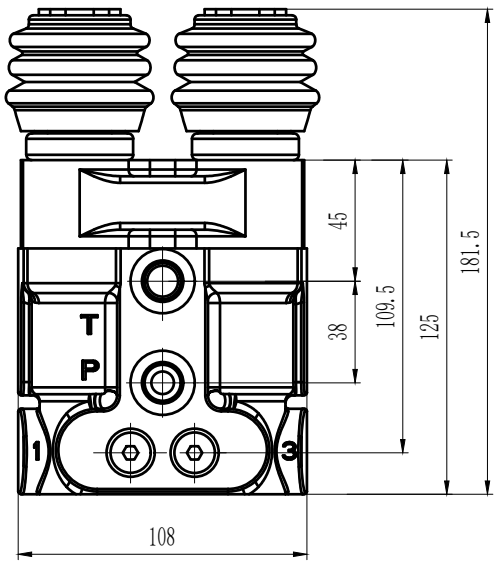


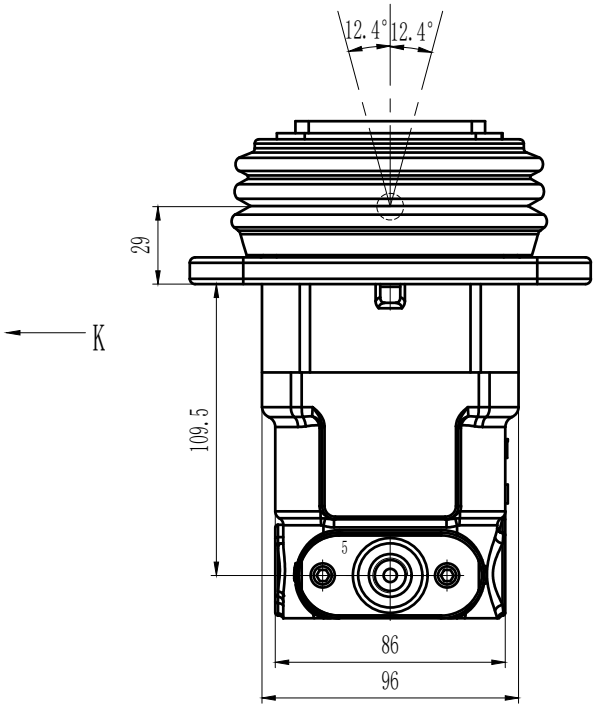


K-direction

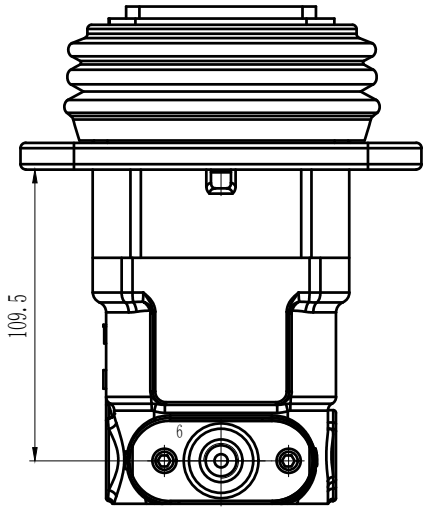


K

K-direction partial bottom view

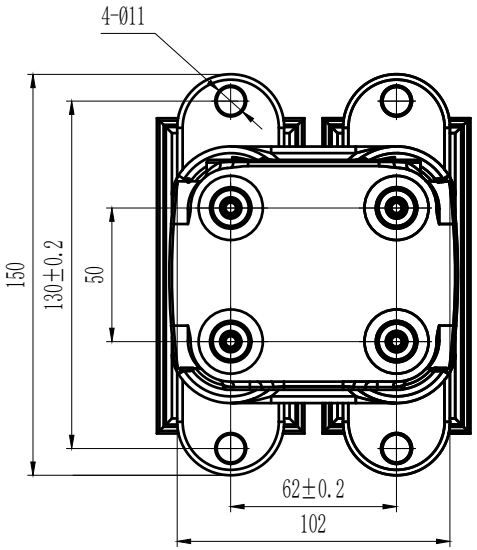


9/16-18 UNF-2B EO

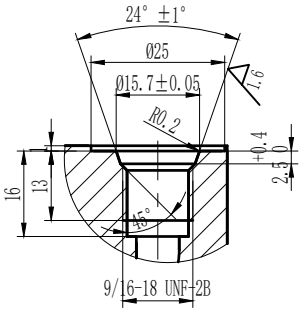


Hydraulic schematic diagram

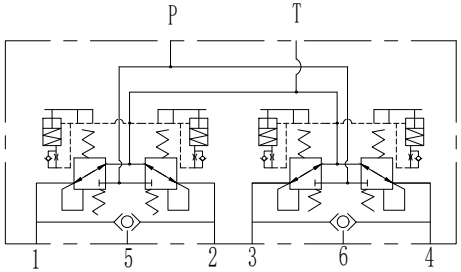


Performance curve

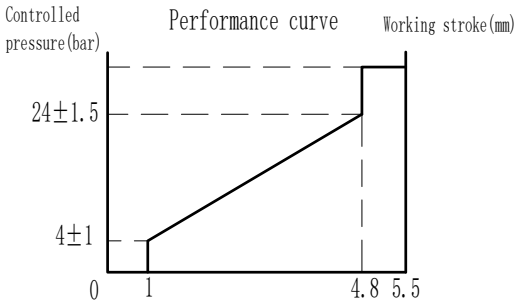


Technical requirement

1. Maximum inlet pressure: 6.9MPa
2. Maximum back pressure: 0.3MPa
3. Flow rate: 10L/min
4. Working oil temperature: -20℃ - 90℃
5. Cleanliness: NAS9 or lower

| | | | | | | | | |
|---|---|---|---|---|---|---|---|---|
| | | | | | FPP-D8-X1 | | | Ningbo Flag-up Hydraulic |
| mark | number | changedfilenumber | signature | date | | | | Buffer foot valve |
| designer | | approver | | | pattern mark | weight | proportion | |
| inspector | | | | | | | 1:1 | 811000032 |
| craft | | | | | | | | |
| standard | | date | | | version | visualangle | | |