811500025

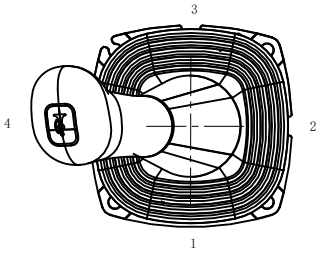

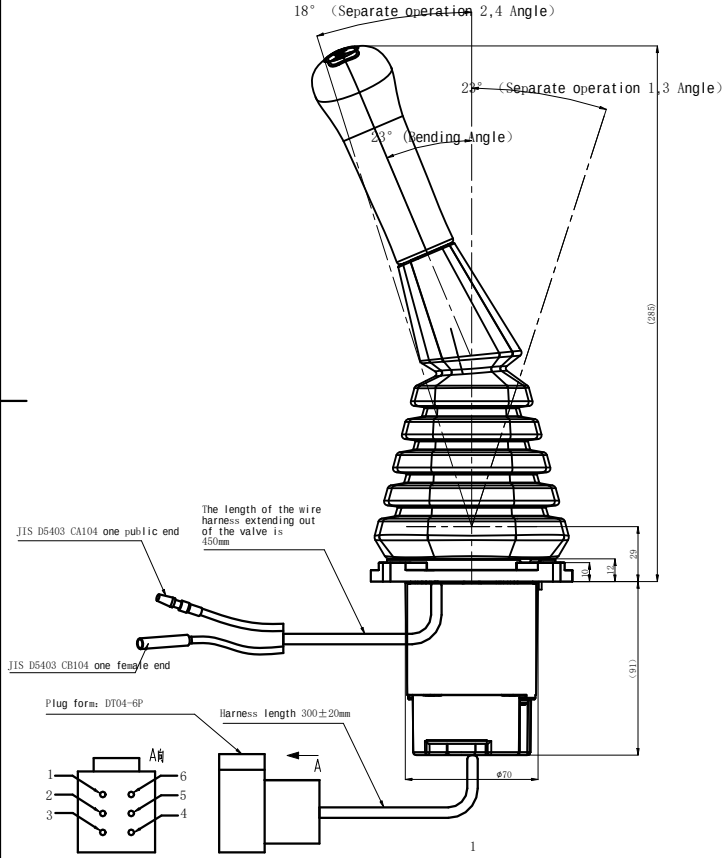

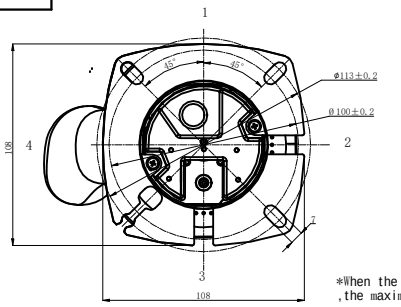

*When the user uses M6 bolts to fix the handle ,the maximum torque shall not exceed 11.7N.m

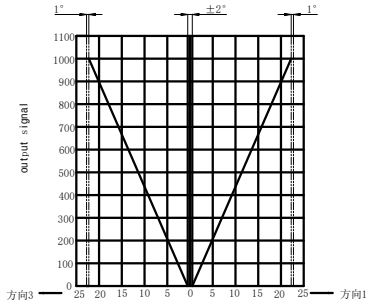

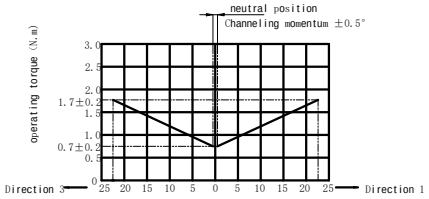

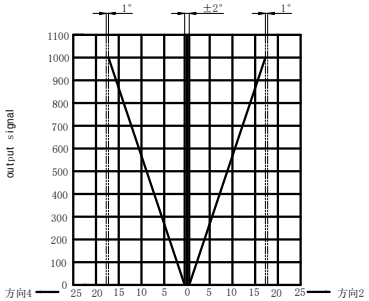

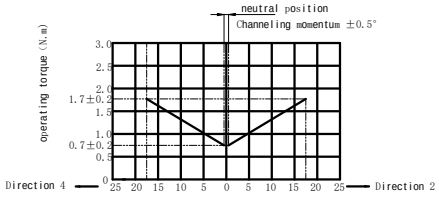

Electrical wiring diagram

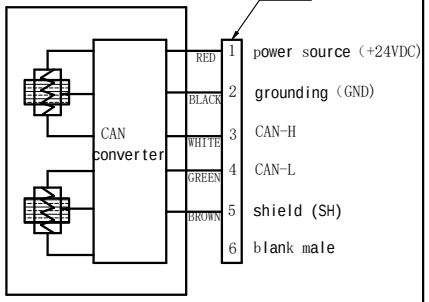

Button switch wiring diagram

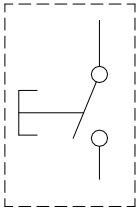

Specifications:
1. Power rules:
   Power supply voltage: 10~32VDC
   Current consumption: below 100mA
   Impulse current: below 10A
2. Signal output:
   Communication protocol: CAN (SAE J1939) EJM1
   Source address: 249
   Communication rate: 250kbps
   Sampling period: 10ms
   Output precision:

temperature	中位	+END	-END
-10~50℃	±2%	±1% -2%+	+2% -1%
-40~75℃	±3%	1% -4%	+4% -1%

Hysteresis: less than ±1.6%
3. Mechanical neutral position: below 0.5°
4. Operating temperature range: -40~75℃
5. Maximum operating torque: 226N/m

Instructions for using the switch:
1. Rated voltage and current: DC30V/3A (resistive load)
   : DC30V/1A (resistive load)
   Minimum borrow capacity: DC5V/160mA~DC30V/26mA
   Operating amount/operating force: 1mm/4N (switch 1, 3)
   : 1mm/6N (switch 2)
2. Operating temperature: -40~75℃
3.Color : Black

skills requirement:
1. The connecting part is locked according to the specified torque;
2. The screw connection part of the top cover and the universal joint and the hand
   Apply thread fastening glue to the handle rod and the connecting head;
3. During the assembly process, at the pin shaft of the universal joint,
   Apply butter to the contact between the top cover and the ejector pin.

借通用件登记
描 图
校 描
旧底图总号
签 字
日 期

标记	处数	更改文件号	签 字	日期
设 计		批准		
审 核				
工 艺				
标准化		日 期	2023/2/10	

FP30-2AW-W1-J249-D-A1-R1

图样标记	重量	比例
		1:2.8
版本号 I	视角	

Ningbo Flag-up Hydraulic

Right handle
(fully powered)

811500025